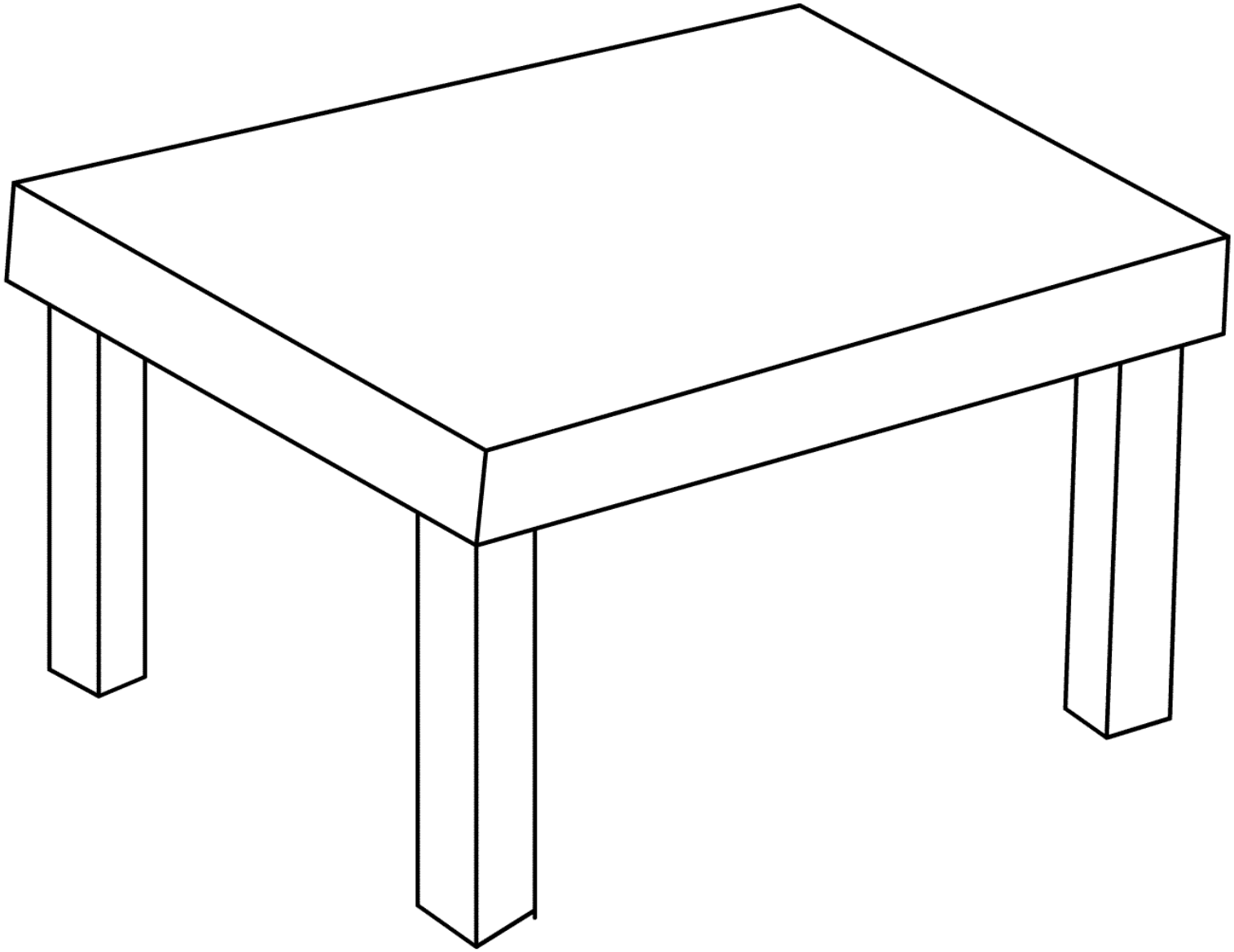

Free Printable Coloring Pages

ToonPeps.com

Downloaded from https://coloringnation.com/page/1744701